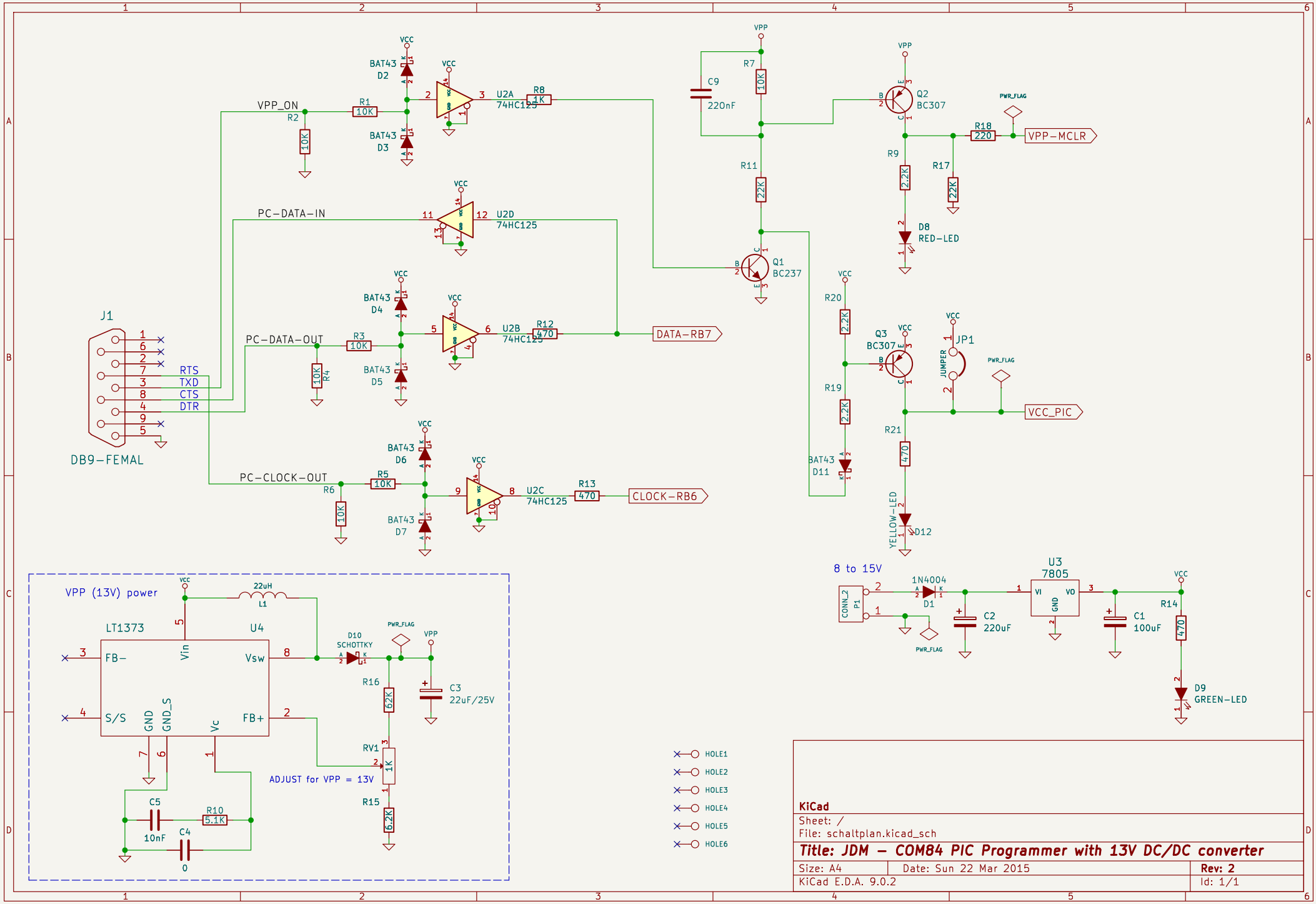
VPP_ON
R2
10K
R1
10K
BAT43
D2
BAT43
D3
VCC
U2A
74HC125
R8
1K
PC-DATA-IN
U2D
74HC125
PC-DATA-OUT
R3
10K
R4
10K
BAT43
D4
BAT43
D5
U2B
74HC125
R12
470
DATA-RB7
J1
DB9-FEMAL
RTS
TXD
CTS
DTR
PC-CLOCK-OUT
R6
10K
R5
10K
BAT43
D6
BAT43
D7
U2C
74HC125
R13
470
CLOCK-RB6
VPP
R7
10K
C9
220nF
R11
22K
Q1
BC237
Q2
BC307
R9
2.2K
R17
22K
R18
220
VPP-MCLR
PWR_FLAG
D8
RED-LED
R20
2.2K
Q3
BC307
R19
2.2K
BAT43
D11
JP1
JUMPER
VCC_PIC
R21
470
YELLOW-LED
D12
VPP (13V) power
LT1373
U4
FB-
Vin
Vsw
S/S
GND
GND_S
Vc
FB+
22uH
L1
D10
SCHOTTKY
R16
62K
C3
22uF/25V
RV1
1K
R15
6.2K
ADJUST for VPP = 13V
C5
10nF
R10
5.1K
C4
0
8 to 15V
CONN_2
P1
1N4004
D1
C2
220uF
U3
7805
VI
VO
GND
C1
100uF
R14
470
D9
GREEN-LED
HOLE1
HOLE2
HOLE3
HOLE4
HOLE5
HOLE6
KiCad
Sheet: /
File: schaltplan.kicad_sch
Title: JDM - COM84 PIC Programmer with 13V DC/DC converter
Size: A4
Date: Sun 22 Mar 2015
Rev: 2
KiCad E.D.A. 9.0.2
Id: 1/1